KraussMaffei

Engineering Passion

180 YEARS KraussMaffei TECHNOLOGY PIONEERS

Produktionslösungen für die Großserienfertigung von endlosfaserverstärkten Spritzgussbauteilen für die Automobilindustrie

Stefan Schierl, KraussMaffei Technologies GmbH

4a Technologietag, 26.02.2019, Schladming

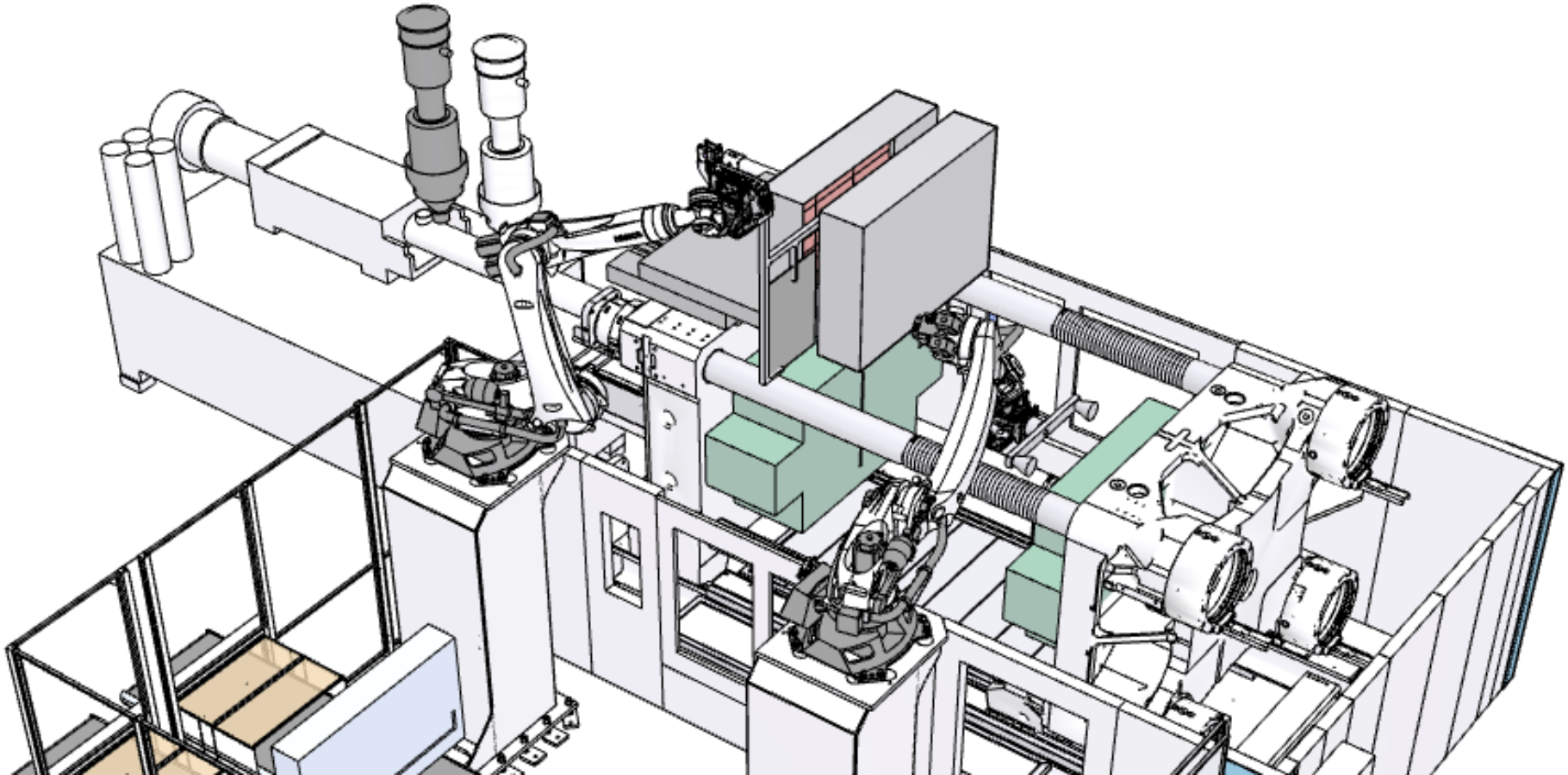

180 YEARS KraussMaffei TECHNOLOGY PIONEERS

Lightweight portfolio covers the entire range of requirements

Schematic lightweight technology portfolio

RPM		IMM		
RTM	Long Fiber Injection	FiberForm	Injection Molding Compounder	Short glass fiber injection molding

Increasing mechanical properties

Increasing cost efficiency

180 YEARS KraussMaffei TECHNOLOGY PIONEERS

Reinforcement materials

- Organo sheet
  (matrix and fibers)

- UD-Tapes
  (unidirectional fibers)

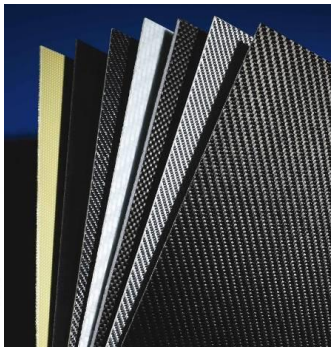

All combinations are possible:
Fiber material: Carbon, Glass, Aramid, …
Fiber orientation: Fabric, unidirectional, multilayer, …
Matrix material: Polypropylene, Polyamide, PEEK, …

(Sabic, BondLaminates,z)

180 YEARS KraussMaffei TECHNOLOGY PIONEERS

Applications for fiber reinforced thermoplastics

Automotive industry

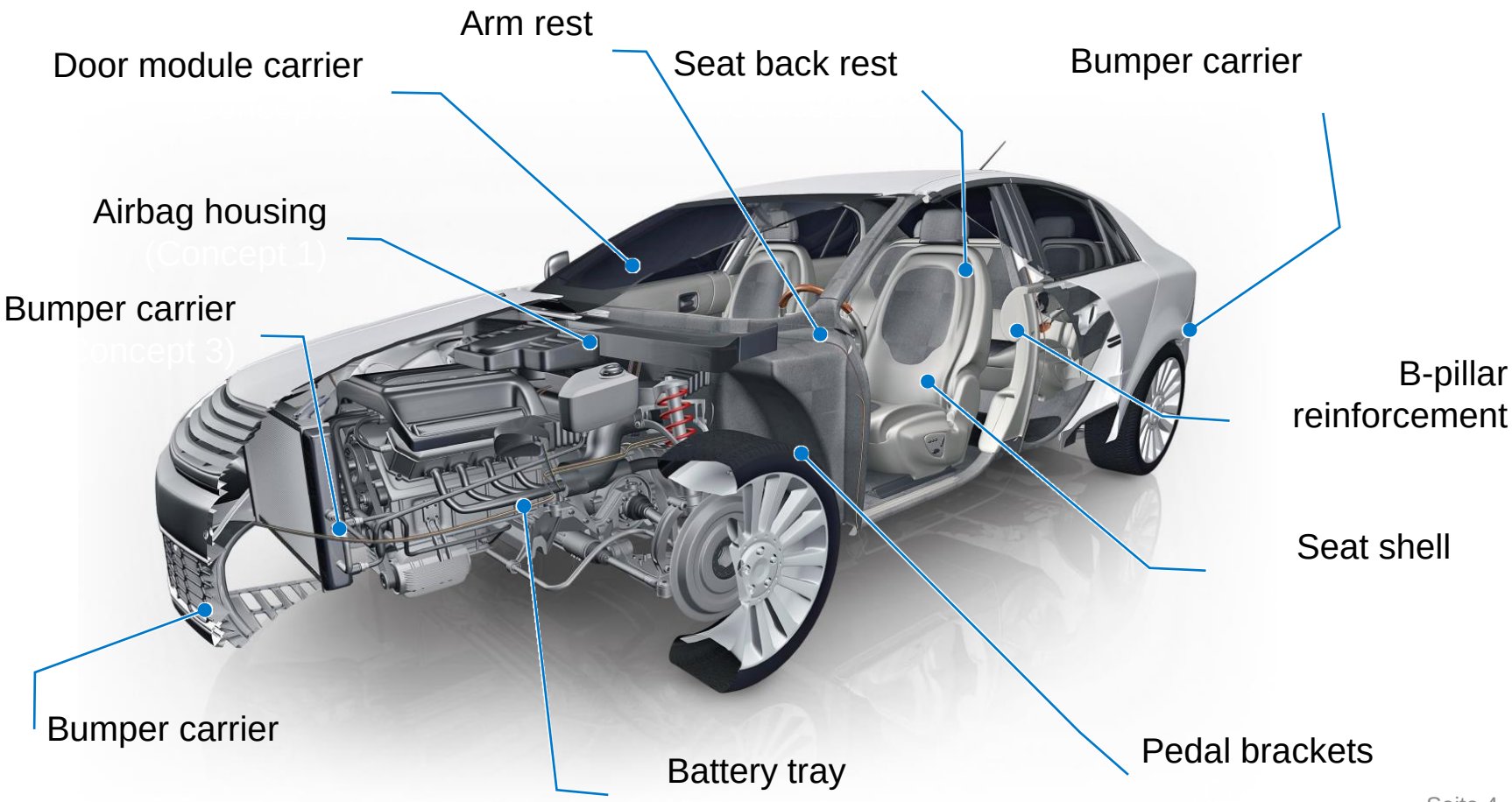

180 YEARS KraussMaffei TECHNOLOGY PIONEERS

Product-Oriented Automation Solutions

		Heating principle	Position of the heating station	Automation kinematic unit	Semifinished product size (w x h) [mm]
Solution	1	Infrared technology	Above the FP*	Linear unit with two kinematic units (LRX 250 TwinZ)	≤ 350 x 350
	2			Linear unit with two kinematic units (LRX 500 TwinZ)	≤ 850 x 850
	3			Two 6-axis robots	≤ 1350 x 850

***: Fixed (mold) platen**

180 YEARS KraussMaffei TECHNOLOGY PIONEERS

Applications for fiber reinforced thermoplastics

Automotive industry

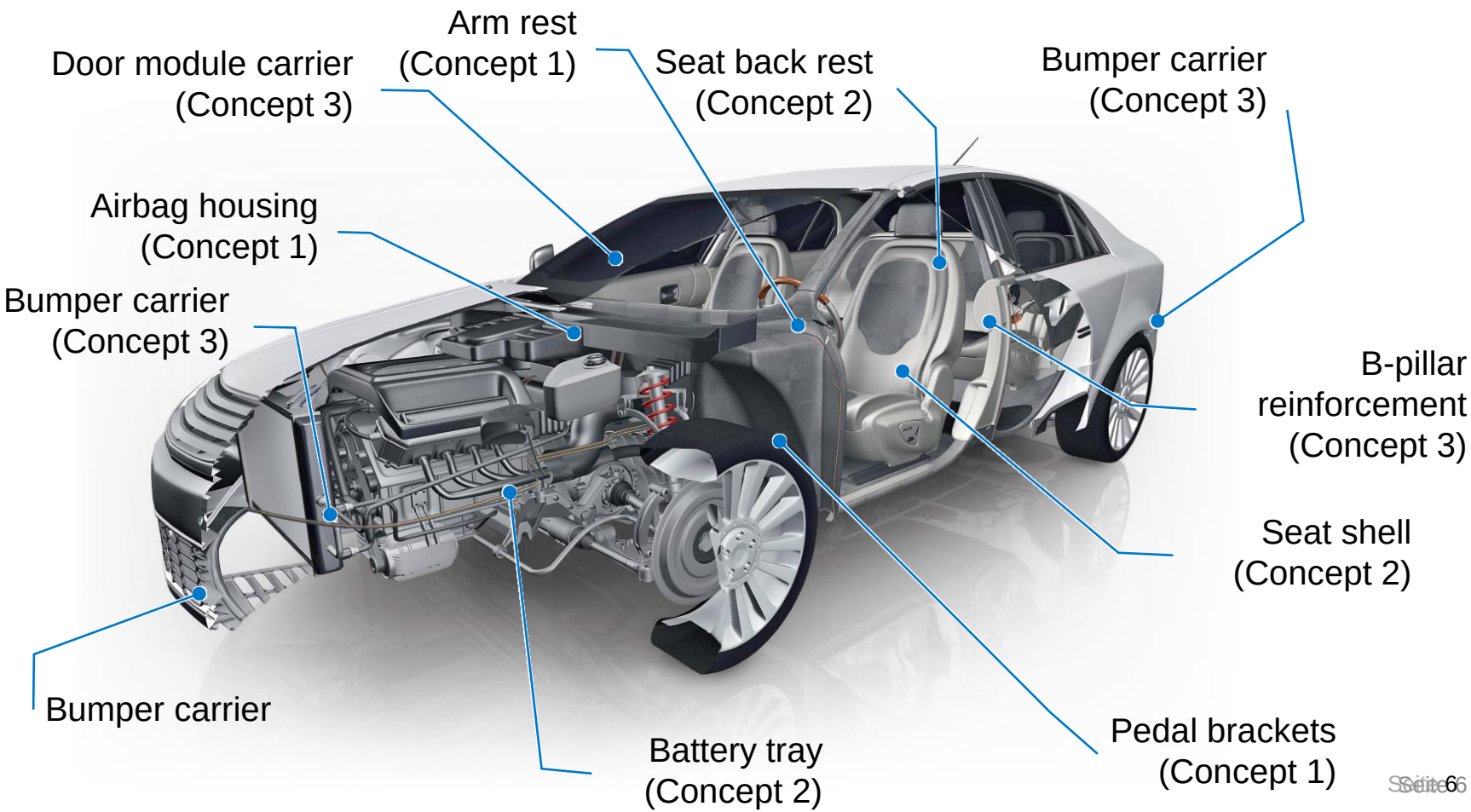

180 YEARS KraussMaffei TECHNOLOGY PIONEERS

Product-Oriented Automation Solutions - Concept 3

Organo-Sheet size ≤ 1350 mm x 850 mm

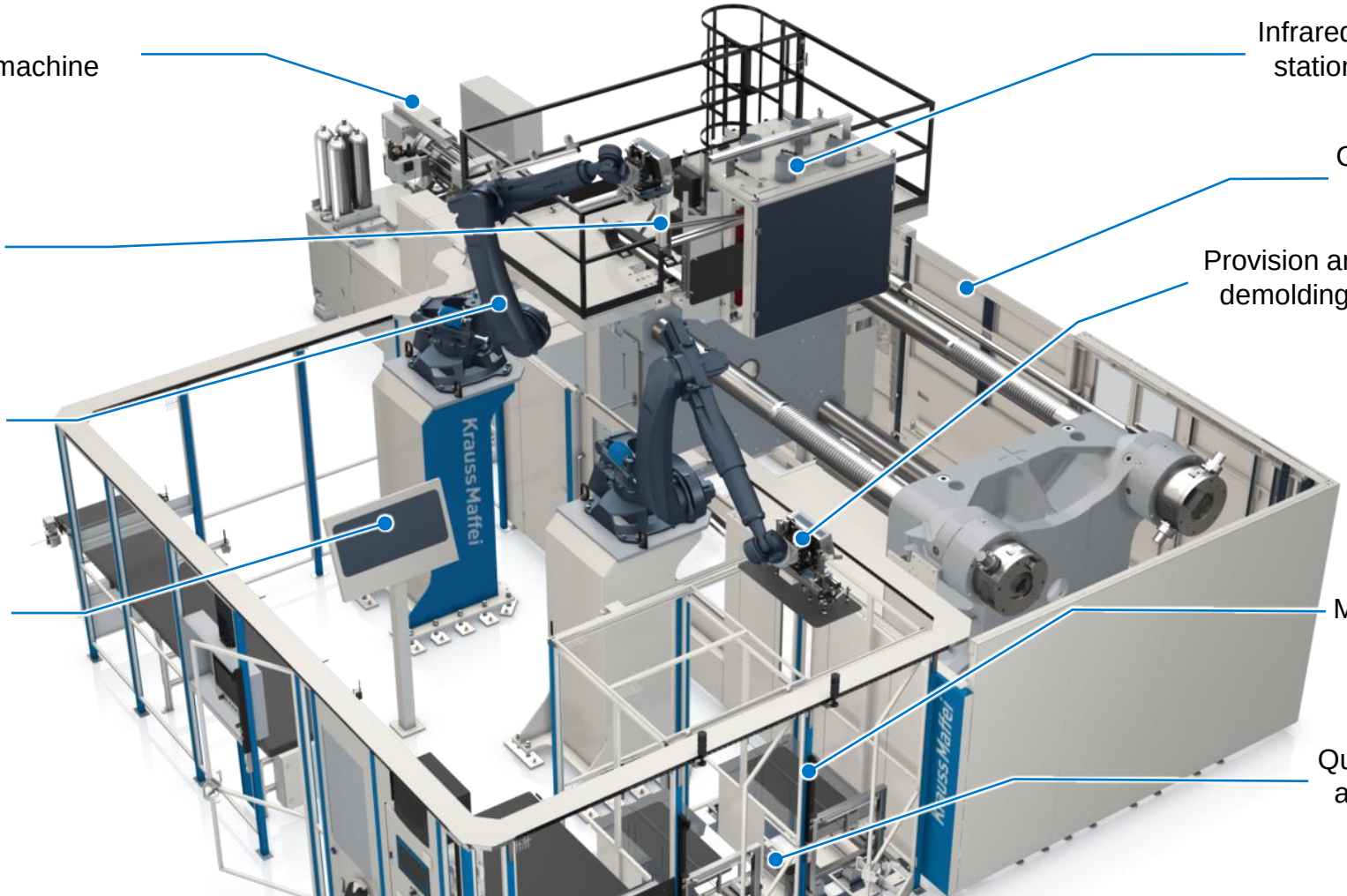

Infrared heating station

Control and regulation of infrared heating system

Initial, standard regulation

- Different heating zones don‘t reach target temperature at the same time
- Material damages due to increased holding times

New, intelligent KM regulation

- Heating algorithm adapts the different heating zones -> Reach of target temperature at the same time
- No material damages due to uniform heating
- Reduction of heating time

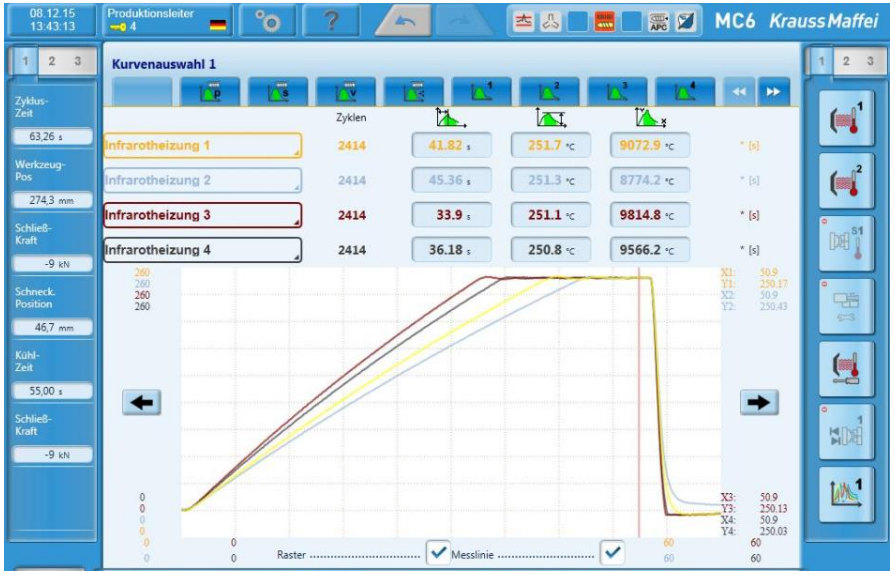

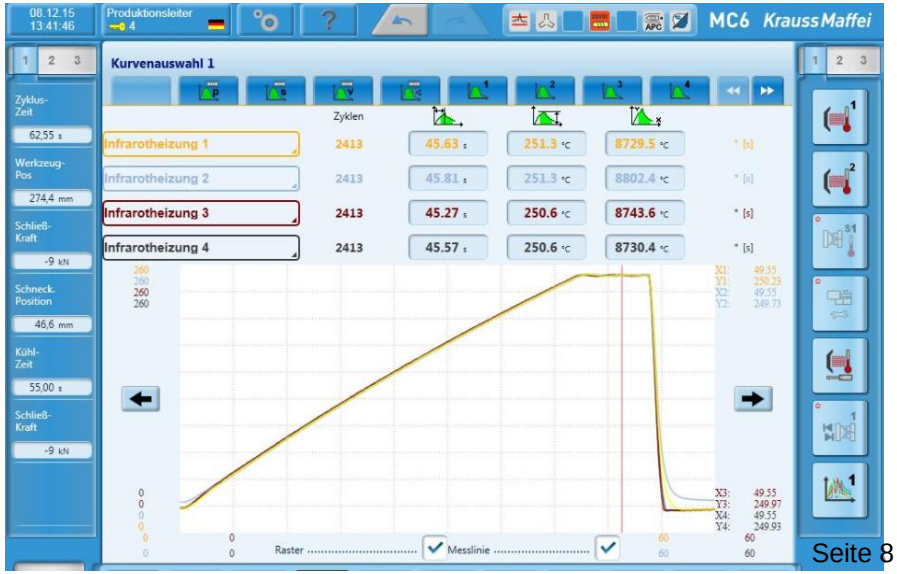

Injection molding machine

FiberForm can be implemented with any KraussMaffei IMM in standard horizontal configuration

- Hydraulic: CX, GX, MX
- All-electric: PX
- Hybrid machines

GX

CX

MX

Your benefits

- **Organo sheet processing with standard horizontal injection molding machines**
- **Interdisciplinary project team between KraussMaffei Technologies and KraussMaffei Automation**

Summary of all relevant process data in pdf-document

Report generation with DataXplorer and ibaAnalyzer

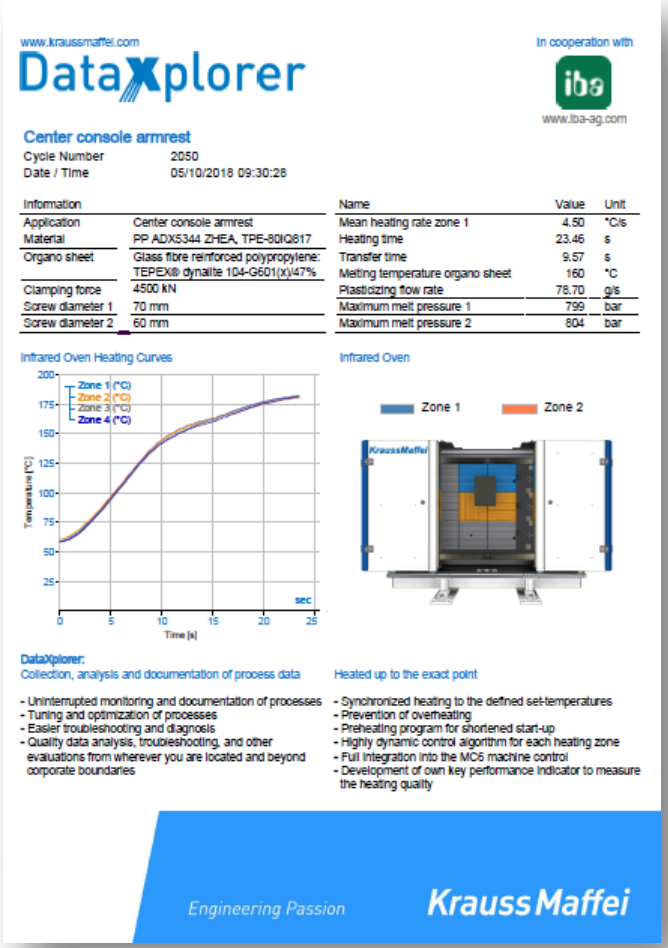

www.kraussmaffei.com

DataXplorer

In cooperation with iba

www.iba-ag.com

Center console armrest

Cycle Number 2050

Date / Time 05/10/2018 09:30:28

Information	
Application	Center console armrest
Material	PP ADX5344 ZHEA, TPE-80IQ817
Organo sheet	Glass fibre reinforced polypropylene: TEPEX® dynalite 104-G601(X)/47%
Clamping force	4500 kN
Screw diameter 1	70 mm
Screw diameter 2	60 mm

Name	Value	Unit
Mean heating rate zone 1	4.50	°C/s
Heating time	23.46	s
Transfer time	9.57	s
Melting temperature organo sheet	160	°C
Plasticizing flow rate	78.70	g/s
Maximum melt pressure 1	799	bar
Maximum melt pressure 2	804	bar

Infrared Oven Heating Curves

Infrared Oven

DataXplorer:

Collection, analysis and documentation of process data

- Uninterrupted monitoring and documentation of processes
- Tuning and optimization of processes
- Easier troubleshooting and diagnosis
- Quality data analysis, troubleshooting, and other evaluations from wherever you are located and beyond corporate boundaries

Heated up to the exact point

- Synchronized heating to the defined set-temperatures
- Prevention of overheating
- Preheating program for shortened start-up
- Highly dynamic control algorithm for each heating zone
- Full integration into the MC6 machine control
- Development of own key performance indicator to measure the heating quality

Engineering Passion KraussMaffei

180 YEARS Krauss Maffei TECHNOLOGY PIONEERS

Application example - Marker binding for tour skiing

MARKER Kingpin – Development with the S&W GmbH

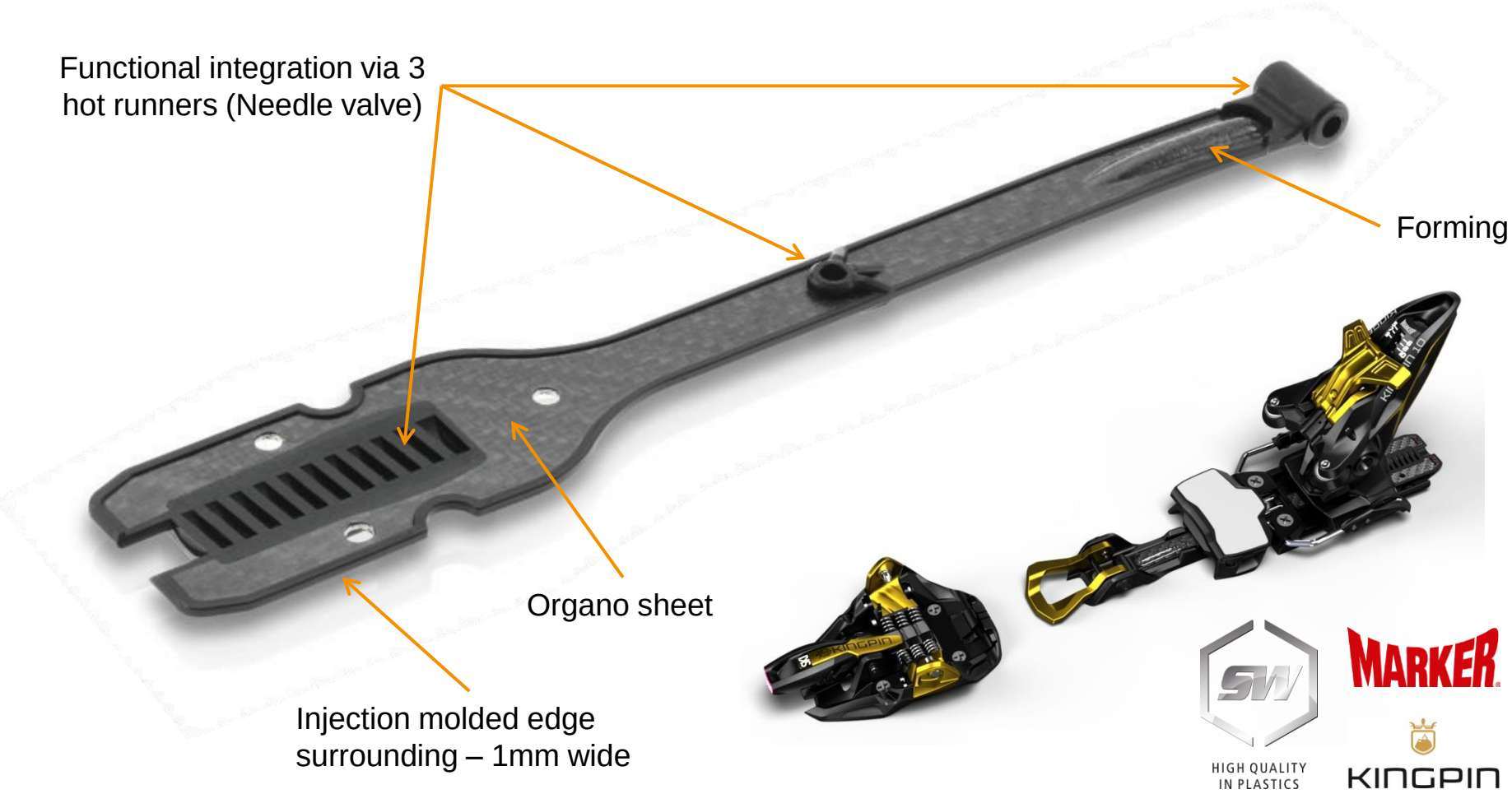

Global door module carrier project – more than 1 Mio. Parts/year

brose
Technik für Automobile

- First-Tier-supplier
- Development and part design of door modules carriers with organo sheet

Quelle: brose

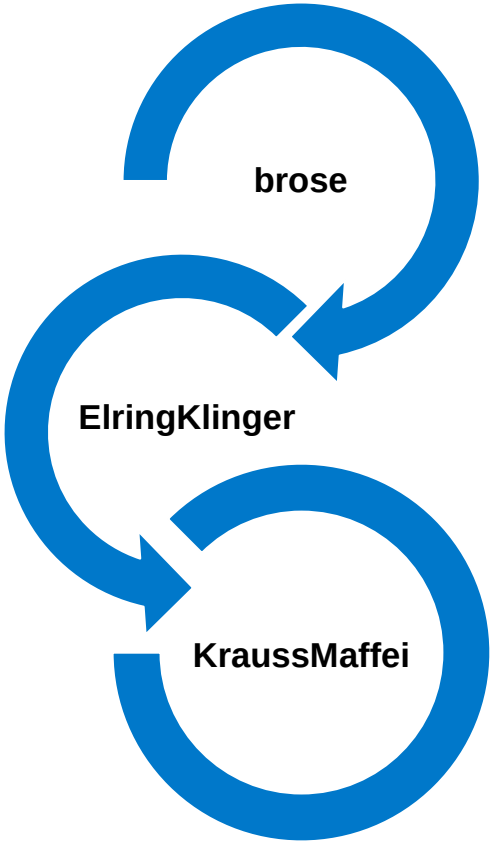

elringklinger

- Second-Tier-Supplier
- Responsible for global industrialization

KraussMaffei

- Third-Tier-Supplier
- Serial production line supplier for ElringKlinger

180 YEARS KraussMaffei TECHNOLOGY PIONEERS

Advantages of our FiberForm-Technology

Summary

Advantages	Description
Flexible manufacturing	• IR-Oven movable • Maintenance position → Standard plastic product • Working position → FiberForm products • Intelligent material supply system • Optical centering station for product/ geometry changes without changing hardware
Low floor space needed	• IR-Oven positioned on the fixed platen • No more floor space needed
Shortest cycle times (< 60 Sec.)	• IR-Oven positioned over the tooling • <3 seconds for hand over to mould • Slim insertion gripper • 50mm slim → tight intermediate mould closing • Decoupling of process steps • Heating & Remove
Smart heating technology	• Self-Adjustable heating zones • Allows an easy product change • Avoiding environmental influences

KraussMaffei FiberForm Technical Lab, Munich

Organo sheet size up to: 850mm x 1100mm

Thank you for your interest

Stefan Schierl
Technology Development

KraussMaffei Technologies GmbH
Krauss-Maffei-Str. 2
80997 München

Phone 089 8899 2367
Email Stefan.schierl@kraussmaffei.com